johnstrand

kitchensfor**small**spaces

trade**price**list

January 2009

compact**living**solutions

The famous John Strand **Mini-Kitchens**

see brochure pages 4 – 6

Delivery from stock

	WITH HOTPLATES	WITHOUT HOTPLATES	
MINI-KITCHEN W:1000 D:600 H:900	**MK11** **£475**	**MK17** **£425**	• Steel construction with white enamel finish • Stainless steel sink & drainer • With or without 2 electric hotplates • 60 minute safety timer with hotplates • 140ltr refrigerator & 4 star freezer compartment • Storage cupboard
MINI-KITCHEN with MICROWAVE W:1000 D:600 H:900	**MK12** **£650**	**MK18** **£600**	• Steel construction with white enamel finish • Stainless steel sink & drainer • With or without 2 electric hotplates • 60 minute safety timer with hotplates • 140ltr refrigerator & 4 star freezer compartment • 800 watt microwave
MINI-KITCHEN with MICROWAVE and PAN DRAWER W:1000 D:600 H:900	**MK19D** **£695**	**MK20D** **£645**	• Steel construction with white enamel finish • Stainless steel sink & drainer • With or without 2 electric hotplates • 60 minute safety timer with hotplates • 140ltr refrigerator & 4 star freezer compartment • 800 watt microwave • Pan drawer below microwave

Kitchenettes see brochure page 8

KITCHENETTE W:1000 D:600 H:2000	**KMK11** **£555**	**KMK17** **£505**	• Steel construction with white enamel finish • Stainless steel sink & drainer • With or without 2 electric hotplates • 60 minute safety timer with hotplates • 140ltr refrigerator & 4 star freezer compartment • Storage cupboard • 1000 x 300 x 570mm wall unit
KITCHENETTE with MICROWAVE W:1000 D:600 H:2000	**KMK12** **£730**	**KMK18** **£680**	• Steel construction with white enamel finish • Stainless steel sink & drainer • With or without 2 electric hotplates • 60 minute safety timer with hotplates • 140ltr refrigerator & 4 star freezer compartment • 800watt microwave • 1000 x 300 x 570mm wall unit
KITCHENETTE with MICROWAVE and PAN DRAWER W:1000 D:600 H:2000	**KMK19D** **£775**	**KMK20D** **£725**	• Steel construction with white enamel finish • Stainless steel sink & drainer • With or without 2 electric hotplates • 60 minute safety timer with hotplates • 140ltr refrigerator & 4 star freezer compartment • 800watt microwave • Pan drawer below microwave • 1000 x 300 x 570mm wall unit

- Prices are subject to change without prior notice
- All prices exclude VAT
- Delivery costs are charged according to postcode, model and quantity required
- Please refer to separate sheet for delivery charges

Galley Kitchens

see brochure page 9

Delivery from stock

	WITH HOTPLATES	WITHOUT HOTPLATES	
GALLEY KITCHEN W:1500 D:600 H:2000	**GMK11** **£705**	**GMK17** **£655**	• Stainless steel construction with white enamel finish • Stainless steel sink & drainer • With or without 2 electric hotplates • 60 minute safety timer with hotplates • 140ltr refrigerator & 4 star freezer compartment • Storage cupboard • 500mm base unit & wall unit • 1000mm wall unit
GALLEY KITCHEN with MICROWAVE W:1500 D:600 H:2000	**GMK12** **£880**	**GMK18** **£830**	• Stainless steel construction with white enamel finish • Stainless steel sink & drainer • With or without 2 electric hotplates • 60 minute safety timer with hotplates • 140ltr refrigerator & 4 star freezer compartment • 800 watt microwave • 500mm base unit & wall unit • 1000mm wall unit
GALLEY KITCHEN with MICROWAVE and PAN DRAWER W:1500 D:600 H:2000	**GMK19D** **£925**	**GMK20D** **£875**	• Stainless steel construction with white enamel finish • Stainless steel sink & drainer • With or without 2 electric hotplates • 60 minute safety timer with hotplates • 140ltr refrigerator & 4 star freezer compartment • 800 watt microwave • Pan drawer below microwave • 500mm base unit & wall unit • 1000mm wall unit

Eye Level Micro Kitchens

see brochure page 7

Allow 3 weeks delivery

KITCHENETTE with MICROWAVE W:1000 D:600 H:2000	**ELK11** **£695**	**ELK17** **£650**	• Stainless steel construction with white enamel finish • Stainless steel sink & drainer • With or without 2-electric hotplates • 60 minute safety timer with hotplates • 140 ltr refrigerator with 4 star freezer compartment • 1000 x 360 x 570mm wall unit with single cupboard and open shelf section • 800-watt microwave
GALLEY KITCHEN with MICROWAVE W:1500 D:600 H:2000	**ELG11** **£895**	**ELG17** **£850**	• Stainless steel construction with white enamel finish • Stainless steel sink & drainer • With or without 2-electric hotplates • 60 minute safety timer with hotplates • 140 ltr refrigerator with 4 star freezer compartment • 1000 x 360 x 570mm wall unit • 500 x 360 x 570 mm open shelf unit • 800-watt microwave • 500 x 600 x 900 mm base unit & worktop

Oven Combi Kitchens

see brochure page 10

Allow 3 weeks delivery

OVEN COMBI with MICROWAVE, GRILL & CONVECTION OVEN W:1600 D:600 H:900	**OCMK1** **£995**		• Includes MK11 Mini-Kitchen • 600mm oven housing base unit & worktop • Cutlery drawer • Built-in combination Microwave, Grill and Convection 0ven • All units supplied assembled
OVEN COMBI with WALL UNITS W:1600 D:600 H:2000	**OCMK2** **£1195**		• Includes MK11 Mini-Kitchen • 600mm oven housing base unit & worktop • Cutlery drawer • Built-in combination Microwave, Grill and Convection 0ven • 1000mm wall unit & 600mm wall unit • All units supplied assembled

Designer Range

Base Units Only

see brochure pages 11 – 13

Check stock availability or allow 4 – 6 weeks for delivery.

	FINISH	2 Hotplates	1 Hotplate	Without Hotplates	
1M BASE W:1000 D:600 H:900	**Finish**	**ETN1021**		**ETN1023**	• White laminate carcase • Stainless steel sink & drainer • 120ltr integrated refrigerator with ice box • Storage cupboard • With or without electric hotplates • 60 minute safety timer with hotplates
	Group 1	**£650**		**£600**	
	Group 2	**£725**		**£675**	
	Group 3	**£790**		**£740**	
1M BASE with DRAWER W:1000 D:600 H:900	**Finish**	**ETN1041**	**ETN1042**	**ETN1043**	• White laminate carcase • Stainless steel sink & drainer • 70ltr integrated refrigerator with ice box • Storage cupboard • Cutlery drawer • With or without electric hotplates • 60 minute safety timer with hotplates
	Group 1	**£665**	**£650**	**£615**	
	Group 2	**£740**	**£725**	**£690**	
	Group 3	**£805**	**£790**	**£755**	
1.2M BASE W:1200 D:600 H:900	**Finish**	**ETN1221**		**ETN1223**	• White laminate carcase • 1 1/2 bowl Stainless steel sink & drainer • 120ltr integrated refrigerator with ice box • Storage cupboard • With or without electric hotplates • 60 minute safety timer with hotplates • **Ceramic hob – Additional cost of £125 only available on ETN1221 (use code ETN1224)** • Compact dishwasher can be supplied with this unit.
	Group 1	**£685**		**£635**	
	Group 2	**£765**		**£715**	
	Group 3	**£825**		**£880**	
1.2M BASE with DRAWER W:1200 D:600 H:900	**Finish**	**ETN1241**	**ETN1242**	**ETN1243**	• White laminate carcase • 1 1/2 bowl Stainless steel sink & drainer • 70ltr integrated refrigerator with ice box • Storage cupboard • Cutlery drawer • With or without electric hotplates • 60 minute safety timer with hotplates • Compact dishwasher can be supplied with this unit.
	Group 1	**£700**	**£685**	**£650**	
	Group 2	**£780**	**£765**	**£730**	
	Group 3	**£840**	**£825**	**£790**	
600MM BASE with DRAWER W:600 D:600 H:900	**Finish**	**ETN641**	**ETN642**	**ETN643**	• White laminate carcase • Stainless steel sink top • 70ltr refrigerator with ice box • With or without electric hotplates • 60-minute safety timer with hotplates • Drawer above fridge • Left or right hand hinged door
	Group 1	**£600**	**£585**	**£550**	
	Group 2	**£640**	**£625**	**£590**	
	Group 3	**£660**	**£645**	**£610**	

Please refer to page 18 of colour brochure for Group finishes.

- Prices are subject to change without prior notice
- All prices exclude VAT
- Delivery costs are charged according to postcode, model and quantity required
- Please refer to separate sheet for delivery charges
- ETN1221 model is also available with a single bowl

Designer Range Kitchens

see brochure pages 11 – 13

Allow 4 – 6 weeks for delivery.

KITCHENETTE

W:1000 D:600 H:2000

FINISH	2 Hotplates with 120ltr fridge	2 Hotplates with 70ltr fridge & drawer	Without Hotplates with 120ltr fridge	Without Hotplates with 70ltr fridge & drawer
Finish	**DK021**	**DK041**	**DK023**	**DK043**
Group 1	**£785**	**£800**	**£735**	**£755**
Group 2	**£925**	**£940**	**£875**	**£895**
Group 3*	**£975**	**£990**	**£925**	**£945**

- White laminate carcase
- Stainless steel sink & drainer
- 120 ltr or 70 ltr refrigerator with drawer
- Storage cupboard
- With or without electric hotplates
- 60-minute safety timer with hotplates
- 1000 x 300 x 570 mm wall unit

KITCHENETTE with MICROWAVE

W:1000 D:600 H:2000

Finish	**DKM021**	**DKM041**	**DKM023**	**DKM043**
Group 1	**£835**	**£855**	**£790**	**£810**
Group 2	**£950**	**£970**	**£905**	**£925**
Group 3*	**£1000**	**£1020**	**£955**	**£975**

- White laminate carcase
- Stainless steel sink & drainer
- 120 ltr or 70 ltr refrigerator with drawer
- Storage cupboard
- With or without electric hotplates
- 60-minute safety timer with hotplates
- 1000 x 360 x 570mm wall unit with single cupboard & open shelf section
- 800-watt microwave

GALLEY KITCHEN

W:1500 D:600 H:2000

Finish	**DG021**	**DG041**	**DG023**	**DG043**
Group 1	**£1120**	**£1140**	**£1075**	**£1095**
Group 2	**£1295**	**£1315**	**£1250**	**£1270**
Group 3*	**£1350**	**£1370**	**£1305**	**£1325**

- White laminate carcase
- Stainless steel sink & drainer
- 120 ltr or 70 ltr refrigerator with drawer
- Storage cupboard
- With or without electric hotplates
- 60-minute safety timer with hotplates
- 1000 x 300 x 570 mm wall unit
- 500 x 300 x 570 mm wall unit
- 500 x 600 x 900 mm base unit with drawer and worktop

GALLEY KITCHEN with MICROWAVE

W:1500 D:600 H:2000

Finish	**DGM021**	**DGM041**	**DGM023**	**DGM043**
Group 1	**£1195**	**£1215**	**£1150**	**£1170**
Group 2	**£1350**	**£1370**	**£1305**	**£1325**
Group 3*	**£1415**	**£1435**	**£1370**	**£1385**

* Additional cost for stainless steel longbar handles @ £11.00

- White laminate carcase
- Stainless steel sink & drainer
- 120 ltr or 70 ltr refrigerator with drawer
- Storage cupboard
- With or without electric hotplates
- 60-minute safety timer with hotplates
- 1000 x 360 x 570 mm wall unit
- 500 x 360 x 570 mm open shelf unit
- 800-watt microwave
- 500 x 600 x 900 mm base unit with drawer and worktop

OVEN COMBI KITCHEN

W:1600 D:600 H:2000

Finish	**DOC021**	**DOC041**	**DOC023**	**DOC043**
Group 1	**£1450**	**£1470**	**£1410**	**£1430**
Group 2	**£1595**	**£1615**	**£1555**	**£1575**
Group 3*	**£1645**	**£1665**	**£1605**	**£1625**

- White laminate carcase
- Stainless steel sink & drainer
- 120 ltr or 70 ltr refrigerator with drawer
- Storage cupboard
- With or without electric hotplates
- 60-minute safety timer with hotplates
- 1000 x 300 x 570 mm wall unit
- 600 x 300 x 570 mm wall unit
- 600 x 600 x 900 mm base oven housing unit with drawer & worktop
- Combination microwave, grill & convection oven

Please refer to page 18 of colour brochure for Group finishes.

- 1200mm wide Designer Range base units can also be used to create Kitchenettes, Galley & Oven Combi Kitchens

Hideaway Mini-Kitchens

see brochure pages 14 – 17

Check stock availability or allow 4 – 6 weeks for delivery.

	FINISH	2 Hotplates	1 Hotplate	Without Hotplates	
1M HIDEAWAY with MICROWAVE W:1000 D:620 H:2100	**Finish**	**HA05**		**HA03**	• White laminate carcase • Stainless steel sink & drainer • 120ltr integrated refrigerator with ice box • Storage cupboard • With or without electric hotplates • 60 minute safety timer with hotplates • Top unit with shelving, light & socket • 800watt microwave • Door activated switch with cut-out to hotplates
	Group 1	**£1075**		**£1025**	
	Group 2	**£1225**		**£1175**	
	Group 3	**£1395**		**£1350**	
1M HIDEAWAY with MICROWAVE and DRAWER W:1000 D:620 H:2100	**Finish**	**HA07**	**HA11**	**HA09**	• White laminate carcase • Stainless steel sink & drainer • 70ltr refrigerator with ice box • Storage cupboard & drawer • With or without electric hotplates • 60 minute safety timer with hotplates • Top unit with shelving, light & socket • 800watt microwave • Door activated switch with cut-out to hotplates
	Group 1	**£1095**	**£1080**	**£1050**	
	Group 2	**£1245**	**£1230**	**£1200**	
	Group 3	**£1415**	**£1400**	**£1380**	
1.2M HIDEAWAY with MICROWAVE W:1200 D:620 H:2100	**Finish**	**HA06**		**HA04**	• White laminate carcase • 1 1/2 bowl Stainless steel sink & drainer • 120ltr integrated refrigerator with ice box • Storage cupboard • With or without electric hotplates • 60 minute safety timer with hotplates • 800watt microwave • Top unit with shelving, light & socket • **Ceramic hob – Additional cost of £125 only available on HA06 (use code HA06 C)** • Compact dishwasher can be supplied with this unit.
	Group 1	**£1150**		**£1100**	
	Group 2	**£1315**		**£1265**	
	Group 3	**£1475**		**£1430**	
1.2M HIDEAWAY with MICROWAVE and DRAWER W:1200 D:620 H:2100	**Finish**	**HA08**	**HA12**	**HA10**	• White laminate carcase • 1 1/2 bowl Stainless steel sink & drainer • 70ltr integrated refrigerator with ice box • Storage cupboard & drawer • With or without electric hotplates • 60 minute safety timer with hotplates • Top unit with shelving, light & socket • 800watt microwave • Door activated switch with cut-out to hotplates • Compact dishwasher can be supplied with this unit.
	Group 1	**£1175**	**£1160**	**£1125**	
	Group 2	**£1340**	**£1325**	**£1295**	
	Group 3	**£1495**	**£1470**	**£1440**	
600MM HIDEAWAY with MICROWAVE and DRAWER W:600 D:620 H:2100	**Finish**	**HA014**	**HA015**	**HA016**	• White laminate carcase • Stainless steel sinktop • 70ltr integrated refrigerator with ice-box • With or without electric hotplates • 60 minute safety timer with hotplates • Drawer above fridge • Left or right hand hinged door • Top unit with shelving, light & socket • 800 watt microwave • Door activated switch with cut-out to hotplates
	Group 1	**£940**	**£925**	**£910**	
	Group 2	**£1020**	**£1005**	**£990**	
	Group 3	**£1095**	**£1080**	**£1065**	

Please refer to page 18 of colour brochure for Group finishes.

- Prices are subject to change without prior notice
- All prices exclude VAT
- Delivery costs are charged according to postcode, model and quantity required
- Please refer to separate sheet for delivery charges

Hideaway Mini-Kitchens

Additional Items

see brochure pages 14 – 19

	FINISH	400 WIDE	500 WIDE	600 WIDE	
TALL STORAGE UNIT W:400/500/600 x D:620 x H:2100	**Finish**	**LSK40**	**LSK50**	**LSK60**	• White laminate carcase • Fitted with shelves • Left or right hand hinged doors • Available as a wardrobe with hanging rail • LSK60 can be used to house a microwave, compact dishwasher or washing machine
	Group 1	**£265**	**£275**	**£285**	
	Group 2	**£285**	**£295**	**£305**	
	Group 3	**£305**	**£315**	**£325**	
TALL SIDE PANEL W:600 x D:18 x H:2100	**Finish**	**HSF**			• Finished side panel to match doors
	Group 1	**£75**			
	Group 2	**£85**			
	Group 3	**£95**			
INTERIOR & EXTERIOR Finished side panels (priced in pairs)	**Finish**	**Base Unit**	**Top Unit**		• Finished side panels to match doors • Finished both externally & internally • Available for both base and top units
	Group 1	Included	Included		
	Group 2	**£75**	**£105**		
	Group 3	**N/A**	**N/A**		
SPLASH BACK	**Finish** Stainless steel	**SSB10** **£120**	**SSB12** **£145**		• Stainless steel sheet splashback for 1000mm & 1200mm wide top units

Backboards for Kitchenettes, Galley & Oven Combi Kitchens

see brochure page 18

BACKBOARDS W:1000/1500/1600 x H:530	**Finish**	**BB10** 1000 x 530	**BB15** 1500 x 530	**BB16** 1600 x 530	• Alternative to wall tiles • Suitable for wet areas • Laminate or Stainless Steel finish • Side panels available on request in brushed aluminium effect finish BASP06 600 x 530 @ £50
	Jamocha Granite Effect & Brushed Aluminium	**£80**	**£115**	**£125**	
	Stainless Steel	**£120**	**£225**	**£240**	

Worktops for Galley & Oven Combi Kitchens

see brochure page 18

WORKTOPS	**Finish**	**Galley** 500 x 600 Included	**Oven Combi** 600 x 600 Included	• Latest technology laminate • 30mm postformed edge • Moisture and Heat resistant • Stainless steel option
	White			
	Blocked Beech, Brushed Aluminium & Granite Effect	**£25**	**£35**	
	Stainless Steel	**£115**	**£135**	

Taps see brochure page 19

MONCOM

- Chrome monobloc mixer tap
- Chrome metal heads
- Swivelling spout

£42

CRU

- Chrome monobloc mixer tap
- 1/4 turn ceramic disc
- Swivelling spout

£52

DLT104

- Chrome monobloc mixer tap
- 3'' levers for easy use
- 1/4 turn ceramic disc
- Swivelling spout

£95

SL2

- Chrome monobloc mixer tap
- Single lever action
- Swivelling spout

£75

TAY/CH

- Economy single lever chrome monobloc tap

£30

CB

- Wooden chopping board for Electrolux mini-kitchens
- Fits over single bowl

£40

Water Heaters & Boiling Water Units see brochure page 19

WHVT

W:290 D:152 H:475

- Vented undersink water heater
- 7 litre capacity
- 3kw rating
- Fast heat up
- Chrome monobloc vented tap

£295

RP1

W:307 D:74 H:160

- Instantaneous undersink water heater
- 9.5kw multi point
- 40 amp fuse rating
- Can be used with any monobloc tap
- Compact size

£195

PBW

W:230 D:138 H:298

- Boiling water unit
- Ideal for making tea, coffee instant soups etc
- 2.4 kw rating/2.0 litre capacity
- Larger capacity models available
- 3 year on-site warranty

£565

BP1

- Instant boiling water for Tea, coffee etc
- Chrome executive tap
- Unit & filter fits under sink
- Refills & re-boils automatically
- Standard 13 amp socket
- Easy fit

£450

Washing Machine, Dishwasher & Microwave Options see brochure page 19

(Microwave options not available for mini-kitchens on brochure pages 5,6,8 and 9)

CWM

W:495 D:515 H:670

- Compact washing machine
- 1300 rpm
- 3kg wash
- Super rinse

£475

CDW

W:470 D:480 H:445

- Compact Dishwasher
- 4 place settings
- 2 temperatures
- 4 programmes
- Cold water fill
- Can fit under the sink of a 1200 wide designer or hideaway base unit

£295

R26ST

W:449 D:366 H:282

- Compact Microwave
- 800 watt output
- 20 litre interior
- Express cook feature
- Stainless steel exterior

£90

CM554W / CM574S

W:510 D:390 H:304

- Slimline Combination microwave, convection oven & grill
- 27 litre capacity
- 6 power levels
- 1000 watt output
- 1300 watt grill
- Convection 100-220°c

CM554W £175 - White finish

CM574W £235 - Stainless Steel finish

Italian Hideaways

see brochure pages 20 – 22

- Accessories such as utensil rails, halogen lights & chopping board are at additional cost
- These kitchens are available without hotplates, but with either a s/steel or laminate worktop
- Allow 6-8 weeks for delivery
- The Italian Hideaway Kitchen is supplied partly with assembled units & partly with flat pack sections

W:1256 D:602 H:1980

ITH320 £2175

- Matching carcase, backboard & doors
- Stainless steel sink & drainer
- Single lever monobloc tap
- Rear & side upstands
- Sink base with internal drawer
- Plate rack/drainer
- Bi-fold doors
- 2 plate electric hob
- Integrated refrigerator
- Recirculating or ducted extractor

W:1706 D:602 H:1980

ITH460 £2675

- Matching carcase, backboard & doors
- Stainless steel sink & drainer
- Single lever monobloc tap
- Rear & side upstands
- Sink base with internal drawer
- Plate rack/drainer
- Bi-fold doors
- **450mm base unit**
- 450mm open shelf unit
- 2 or 4 plate electric hob
- Integrated refrigerator
- Recirculating or ducted extractor

W:1706 D:602 H:1980

ITH580 £2995

- Matching carcase, backboard & doors
- Stainless steel sink & drainer
- Single lever monobloc tap
- Rear & side upstands
- Sink base with internal drawer
- Plate rack/drainer
- Bi-fold doors
- **450mm integrated dishwasher**
- 450mm open shelf unit
- 2 or 4 plate electric hob
- Integrated refrigerator
- Recirc/ducted extractor

W:1706 D:602 H:1980

ITH570 £2995

- Matching carcase, backboard & doors
- Stainless steel sink & drainer
- Single lever monobloc tap
- Rear & side upstands
- Sink base with internal drawer
- Plate rack/drainer
- Bi-fold doors
- **450mm multi-function oven**
- 450mm open shelf unit
- 2 or 4 plate electric hob
- Integrated refrigerator
- Recirculating or ducted extractor

Italian Contemporary Kitchens

see brochure pages 23 – 25

These kitchens are part of a multi-system and are therefore available in a wide range of finishes and sizes.

(Grey Kitchen)

W:1800 D:600 H:2430

ITK1 £1995 brochure page 23

- Stainless steel sink & drainer
- Single lever monobloc tap
- 600mm sink base unit
- 600mm hob base unit
- 1800 x 600 x 40 laminate worktop
- 600mm tall wall unit with plate rack
- 600mm tall wall unit
- 600mm extractor wall unit
- 2 or 4 plate electric hob
- Integrated refrigerator
- Recirculating or ducted extractor

(Blue Kitchen)

W:2400 D:600 H:2190

ITK2 £2650 brochure page 23

- Stainless steel sink & drainer
- Single lever monobloc tap
- 600mm sink base unit
- 600mm oven housing unit
- 600mm drawer unit
- 2400 x 600 x 40 laminate worktop
- 600mm wall unit with plate rack
- 2 No. 600mm wall units
- 600mm extractor wall unit
- 4 plate electric hob
- Single multi-function oven
- Integrated refrigerator
- Recirculating or ducted extractor

(White Kitchen)

W:2400 D:600 H:2190

ITK3 £2225 brochure page 25

- Stainless steel sink & drainer
- Single lever monobloc tap
- 600mm sink base unit
- 600mm hob base unit
- 600mm drawer unit
- 2400 x 600 x 40 laminate worktop
- 600mm wall unit with plate rack
- 2 No. 600mm wall units
- 600mm extractor wall unit
- 4 plate electric hob
- Integrated refrigerator
- Recirculating or ducted extractor

Kitchens for wheelchair use

Check stock availability or allow 4 – 6 weeks for delivery.

W:1000 D:600
x adjustable height

FINISH	2 Hotplates	1 Hotplate	Without Hotplates
Finish	**ETN1081**	**ETN1082**	**ETN1083**
Group 1	**£420**	**£405**	**£390**
Group 2	**£450**	**£435**	**£420**
Group 3	**£465**	**£450**	**£435**

- White laminate carcase
- Stainless steel sink & drainer
- With or without electric hotplates
- 60-minute safety timer with hotplates
- Cutlery drawer
- Wall hung adjustable brackets

W:1200 D:600
x adjustable height

Finish	**ETN1281**	**ETN1282**	**ETN1283**
Group 1	**£450**	**£435**	**£420**
Group 2	**£480**	**£465**	**£450**
Group 3	**£495**	**£480**	**£465**

- White laminate carcase
- 1 1/2 bowl stainless steel sink & drainer
- With or without electric hotplates
- 60-minute safety timer with hotplates
- Cutlery drawer
- Wall hung adjustable brackets

Italian Wallbeds see brochure page 27

These wallbeds are part of a modular system and are therefore available in a wide range of finishes and sizes. Please contact us with your specific requirements.

W:2250 D:410
H:1980

(Mattress not included)

WBSC1 £1050

W:900 D:410
H:1980

(Mattress not included)

WBS430 £650

Reflex Mattress
W:750 D:140
L:1850

2 required for bunkbeds WBB634

R1 £175

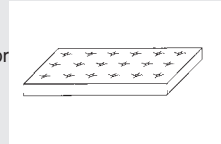

W:2000 D:410
H:1980

(Mattress not included)

WBB634 £1050

Additional Cupboards for Wallbeds.

TC45 Single Cupboard
TC55 Single Cupboard
TC90 Double Cupboard

Available with shelves or Hanging rail

TC45 W:450 D:410 H:1980 **£295**

TC55 W:550 D:410 H:1980 **£325**

TC90 W:900 D:410 H:1980 **£465**

W:2900 D:410
H:1980

(Mattress not included)

WBDC3 £1450

W:2000 D:410
H:1980

(Mattress not included)

WBD630 £1095

Reflex Mattress
W:1600 D:170
L:1850

R3 £325

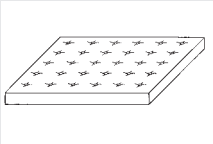

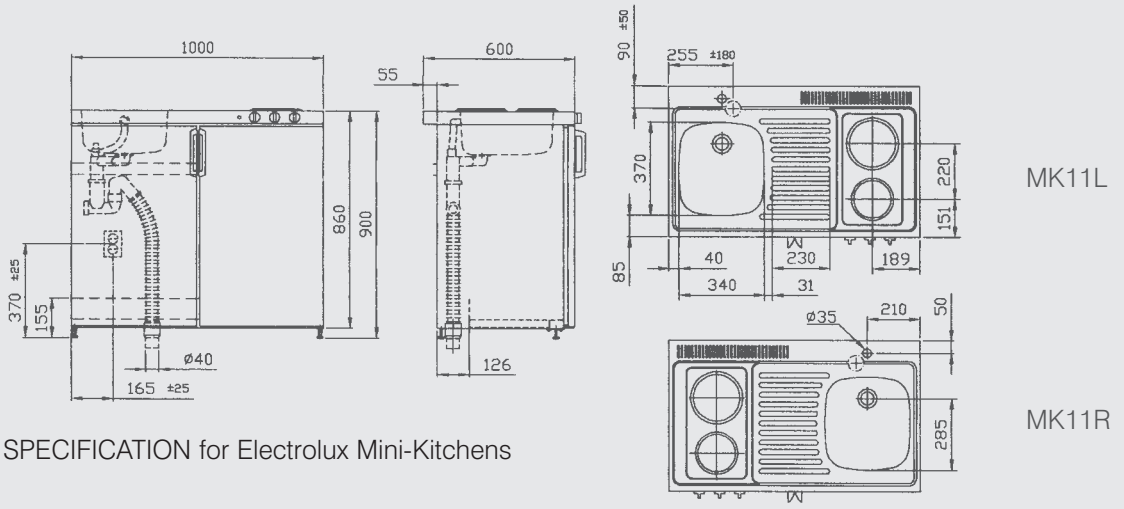

GENERAL SPECIFICATION for Electrolux Mini-Kitchens

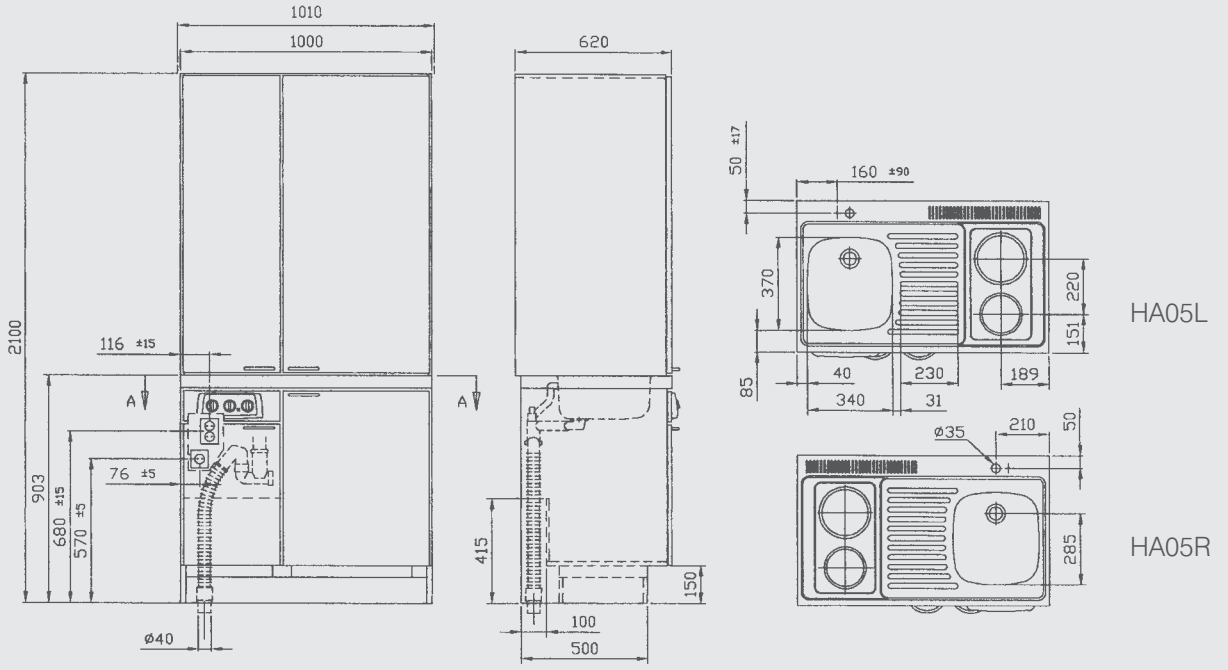

GENERAL SPECIFICATION for 1m wide Electrolux Hideaway Kitchens (illustrated with hotplates)

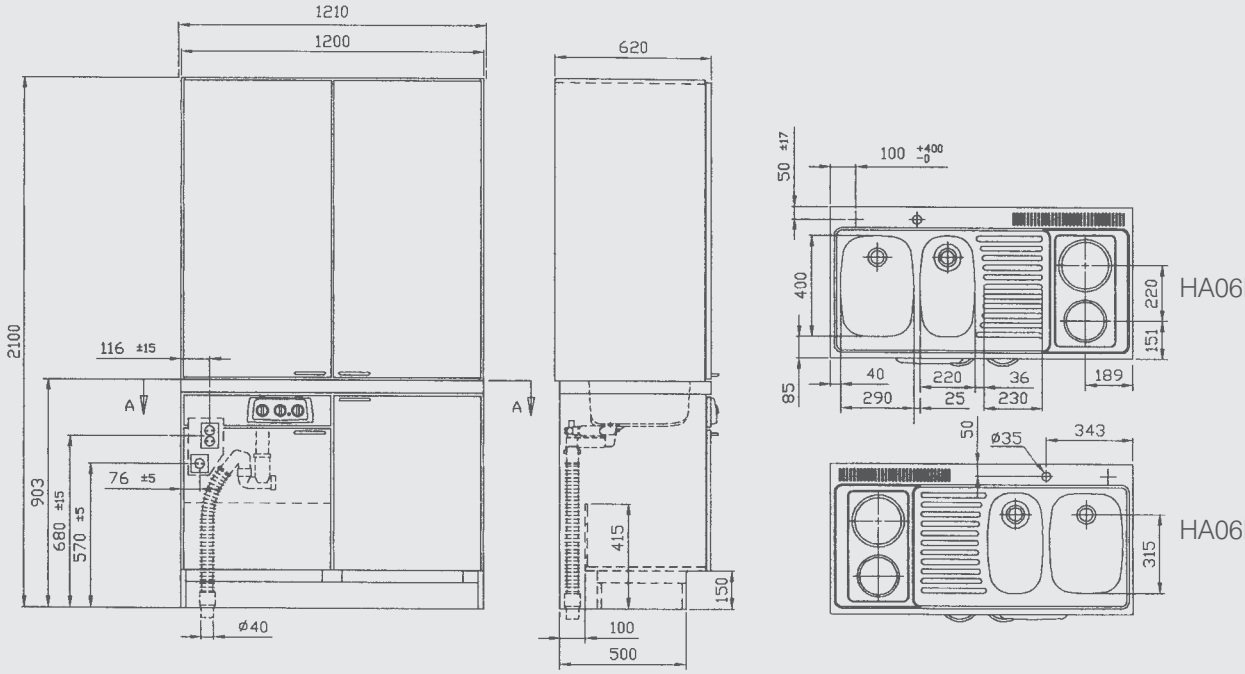

GENERAL SPECIFICATION for 1.2m wide Electrolux Hideaway Kitchens (illustrated with hotplates)

TECHNICAL DATA FOR ELECTROLUX MINI-KITCHENS

SINKTOP
All Stainless steel construction
35mm cut out for monobloc tap
Complete with waste, trap &
overflow fittings for 40mm connection
Specify Left or Right hand bowl

ELECTRICAL DATA
Voltage 230 – 240V / 50Hz / 13A
Total wattage incl. refrigerator 2300W
The Mini-kitchen is supplied with two
electrical leads with earthed plugs for
the hotplates and refrigerator
Connect to a single phase 13A supply
We recommend one socket per appliance

REFRIGERATORS
Mini-kitchens
140ltr with 4 star freezer - 100W
Hideaway Mini-kitchens
120ltr capacity with icebox - 95W
or 70ltr capacity with icebox - 95W

HOTPLATES
145 dia. 1000W
180 dia. 1200W
Operated by a 60 minute timer
with automatic cut-out

MICROWAVES
(All models except Oven Combi)
Compact Microwave 800W output
20 ltr capacity 5 power levels
Combination Microwave
(Oven Combi Kitchens)
900W output 26 ltr capacity
1850W Quartz grill
Convection oven (40-250 C)

BASE AND WALL UNITS
Units are supplied flatpacked
Matt white melamine finish
18mm carcase, 90 hinges, 'D' handles
30mm postformed worktop
Wall units 500w / 1000w x 300d x 570h
Base unit 500w x 600d x 900h

18mm carcase for Designer and Oven Combi Kitchens.
All supplied assembled

INSTALLATION
The Mini-Kitchen should be installed so that it can be pulled forward from the wall to allow for servicing access.
Waste and water supplies should be positioned on the side of the sink as access behind the refrigerator is limited.
The Mini-Kitchen complies with
requirements of the following EU directives:
- 73/23/EEC, dated 19.02.1973 – low voltage directive
- 89/336/EEC, dated 03.05.1989 (incl. amendment
- 92/31/EEC) directive on electromagnetic compatibility

Appliances are covered by the Manufacturers Guarantee.

We reserve the right to change the specification
without prior notice. If a particular point is critical
to you please check before you purchase.

E & OE

JOHN STRAND (MK) LTD CONDITIONS OF TRADE

1. GENERAL
In these conditions:
"Seller" means John Strand (MK) Ltd.
"Buyer" means the person, firm or company who places an order with the Seller for the manufacture and/or supply of any goods

2. ACCEPTANCE
Orders are subject to these Conditions of Trade. Any different conditions on the Buyer's document will only apply if the Seller agrees in writing.

3. TERMS
Payment for goods must be made before delivery. Where customers have approved accounts, these are due for settlement 30 days from the date of invoice. Accounts are payable strictly nett.

4. PRICES
Unless otherwise agreed by the Seller in writing, quotations are held open for acceptance for a period of 12 weeks from the date they are issued. The prices charged will be the prices supplied by the Seller and are exclusive of VAT.

5. DELIVERY PERIOD
Time of delivery will not be of the essence of the contract. The period quoted for delivery commences on the date the order is acknowledged but is an estimate only. While the Seller will use all reasonable commercial endeavours to deliver the goods by the date specified, the Seller will not be liable in any way for unforeseen delays.

6. LOSS OR DAMAGE IN TRANSIT
Any damages or shortages must be reported to the Seller within 3 working days and the Delivery Note must be marked 'Damaged or Goods Missing'. Otherwise it will be deemed that the goods have been received 'Complete' and in 'Good Condition'.

7. RISK
The risk in the goods will pass to the Buyer on delivery and in the event of the goods being later lost or destroyed by fire or burglary or due to any other mishap or accident the Buyer will still be responsible to the Seller for payment.

8. DEFECTIVE MATERIALS AND GOODS
The Buyer will have the benefit of and be subject to such product guarantees of quality as the Seller may from time to time provide in respect of goods manufactured and/or supplied by the Seller and the Buyer is deemed to have full knowledge of the terms of such guarantees. Copies of the guarantees will be supplied by the Seller on request. The seller makes no other representations or warranties in relation to the goods other than those contained in the guarantees.

Subject to the provisions of such guarantees and to the extent that is permitted by law, the Seller excludes its liability for any loss or damage suffered by the Buyer in connection with the goods or their use.

9. ALTERATION TO DESIGN AND SPECIFICATION
The Seller reserves the right to alter, modify or improve the design or specification of any goods without notification.

10. CANCELLATION OF ORDERS
We regret that the Seller is unable to accept cancellation of orders for goods manufactured to customer's special requirements unless first agreed by the Seller in writing. All other cancellations will be subject to a 25% charge against the cost of the goods ordered for re-stocking. Additional delivery and collection charges will apply.

11. OWNERSHIP
The legal ownership of all goods ordered will remain with the Seller until full payment has been received from the Buyer.

CALL 020 8930 6006 FAX 020 8930 6008

John Strand (MK) Ltd. 12/22 Herga Road, Wealdstone,
Harrow, Middlesex HA3 5AS